BESTSELLER, HØJT FLOW, HØJT TRYK, BIOTECH

Elastomertætnet Mass Flow Controller og Meter - MFC/MFM - SLA5800 Serien

SLA5850
Mass flow controller SLA5850 0.003 - 50 slpm

- Præcis måling og regulering af flere gasser i et instrument
- Flowområde fra 0.003 nl/min. til 2500 nl/min. (ref. N2)
- Op til 310 bar tryk
- Responstid <1 sek.
- Kommunikerer bla. ved Analog 4-20 mA, RS485, Foundation Fieldbus, Profibus eller Ethernet/IP

PRODUKTBESKRIVELSE

Brooks Instrument's serie SLA5800 er en digital, termisk masseflowmåler/meter og -controller. Denne serie er designet med elastomere pakninger. Instrumenterne tilbyder høj nøjagtighed, stabilitet samt repeterbarhed. Det er muligt at lagre forskellige gaskurver i instrumentet, hvilket dels betyder, at man kan anvende ét og samme instrument til flere gasser, dels at man nemt og hurtigt kan omstille til en anden gas uden at instrumentet tages ud af systemet. Denne serie af Masseflowmåler/meter og controllere tilbyder også et højt max tryk, helt op til 310 Barg.

Denne serie kan med fordel benyttes i forbindelse med katalysator- og pilotprocesser. Ligeledes er den ideel i laboratorier, i brændselscelle industrien samt i bioreaktorer.

NB: Dette produkt er blot basen og findes i mange variationer alt efter deres anvendelse. Se teknisk dokument længere nede for varianter og tag fat i os for at få vejledning til at finde det helt rigtige produkt til jeres behov.

OBS ! Den viste pris er kun for "basic" enheden
Kontakt vores produktspecialist for at finde den mest optimale løsning til dit behov.

;

SPECIFIKATIONER

Alarm	Sensor Output, Control Valve Output, Over Temperature, Power Surge/Sag, Network Interruption
Analog output	0-5 V, 1-5 V, 0-10 V, 0-20 mA, 4-20 mA
Certifikater	Safe Area, Atex Zone2, Div. 2 /Zone 2 UL, Zone 2 IECEx, Kosha
Diagnostik/serviceport	RS485 via 2.5mm jack
Differenstryk max	2,41 bar
Differenstryk min	0,35 bar
Digital output	DeviceNet, Fieldbus, Profibus, RS485, EtherCAT, EtherNet/IP
Display	Nej
Elektrisk tilslutning	DeviceNet™: 1xM12 with threaded coupling nut (B), EtherCAT®, EtherNet/IP™: 1x5-pin M8 with threaded coupling nut/2xRJ45, Profibus®: 1x15-pin Male Sub-D/1x9-pin female Sub-D, RS485: 1 x 15-pin Male Sub-D, (A)
Flow	0.003 - 50 ln/min
Forsyningsspænding	24 V
Funktion	Mass Flow Controller
Gentagelsesnøjagtighed	±0.2%
Godkendelser, Atex	ATEX, IECEx
I O-porte - Analog	0-5 V 15-PIN, 0-20mA 15-pin, 4-20mA 15-pin, 0-10 V, 1-5V
I/O-porte - tilkobling	1 x 15-PIN Male Sub-D, 1x9-PIN Female Sub-D, 1xM12 threat, 1x5-PIN M8 threat
Lækrate	1x10-9 atm. cc/sec He
Materiale O-ring	Buna, EPDM, Kalrez, PTFE, Viton
Medietemperatur fra	-14 °C
Medietemperatur til	65 °C
Multiflow	Ja
Nøjagtighed	±0.9% af SP (20-100% FS)
Responstid	<1 s
Temperaturkoefficient	Zero: <0.05% af F.S per oC, Span: <0.1% af S.P. per oC
Temperaturområde fra	-14 °C
Temperaturområde til	65 °C
Tilslutning	9/16" -18UNF, 1/8" tube, 1/4" tube, 3/8 tube, 1/2" tube, 1/4" vco, 3/8"-1/2" vco, 1/4" NPT-F, 3mm tube, 6mm tube, 10mm tube, 1/4" VCR, 3/8 - 1/2 VCR, 1/4" RC (BSP), 1/2" Sanitary, 3/4" Sanitary
Trykområde max	310 bar
Type ventil	NC/NO

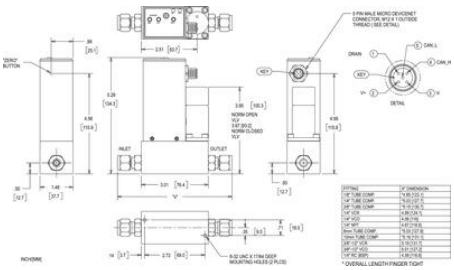

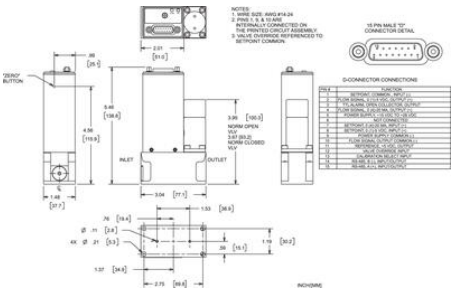

D-CONNECTOR CONNECTIONS

PIN #	FUNCTION
1	SETPOINT COMMON (INPUT 2)
2	FLOW SIGNAL 0-5 VDC OUTPUT (+)
3	FLOW SIGNAL OPEN COLLECTOR OUTPUT
4	FLOW SIGNAL 0-20 MA OUTPUT (+)
5	POWER SUPPLY +15 VDC (+) OR VDC
6	NOT CONNECTED
7	SETPOINT 0-20 MA INPUT (+)
8	SETPOINT 0-5 VDC INPUT (+)
9	POWER SUPPLY COMMON (-)
10	FLOW SIGNAL OUTPUT COMMON (-)
11	NOT CONNECTED
12	CALIBRATION SELECT INPUT
13	RS-485 A (+) INPUT/OUTPUT
14	RS-485 A (+) INPUT/OUTPUT

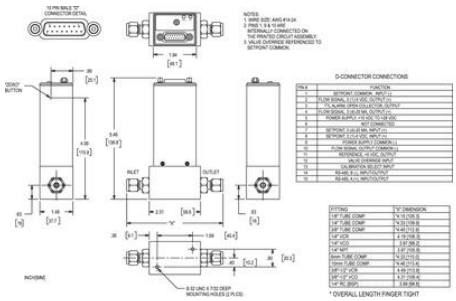

D-CONNECTOR CONNECTIONS

PIN #	FUNCTION
1	SETPOINT COMMON (INPUT 2)
2	FLOW SIGNAL 0-5 VDC OUTPUT (+)
3	FLOW SIGNAL OPEN COLLECTOR OUTPUT
4	FLOW SIGNAL 0-20 MA OUTPUT (+)
5	POWER SUPPLY +15 VDC (+) OR VDC
6	NOT CONNECTED
7	SETPOINT 0-20 MA INPUT (+)
8	SETPOINT 0-5 VDC INPUT (+)
9	POWER SUPPLY COMMON (-)
10	FLOW SIGNAL OUTPUT COMMON (-)
11	NOT CONNECTED
12	CALIBRATION SELECT INPUT
13	RS-485 A (+) INPUT/OUTPUT
14	RS-485 A (+) INPUT/OUTPUT

FITTING	"V" DIMENSION
1/8" TUBE COMP	4.16 [105.7]
1/4" TUBE COMP	4.33 [109.9]
3/8" TUBE COMP	4.46 [113.4]
1/4" VCR	4.19 [106.3]
1/4" NPT	3.87 [98.3]
6mm TUBE COMP	4.33 [110.0]
10mm TUBE COMP	4.46 [113.4]
3/8" VCO	4.21 [106.4]
1/4" BC (BSP)	3.96 [98.8]

* OVERALL LENGTH FINGER TIGHT

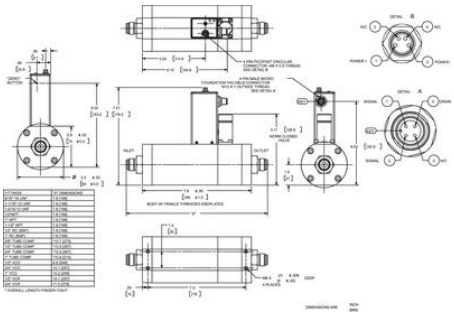

FITTING	"V" DIMENSION
1/8" TUBE COMP	4.16 [105.7]
1/4" TUBE COMP	4.33 [109.9]
3/8" TUBE COMP	4.46 [113.4]
1/4" VCR	4.19 [106.3]
1/4" VCO	4.21 [106.4]
1/4" NPT	3.87 [98.3]
6mm TUBE COMP	4.33 [110.0]
10mm TUBE COMP	4.46 [113.4]
3/8" VCR	4.19 [106.3]
3/8" VCO	4.21 [106.4]
1/4" BC (BSP)	3.96 [98.8]

* OVERALL LENGTH FINGER TIGHT

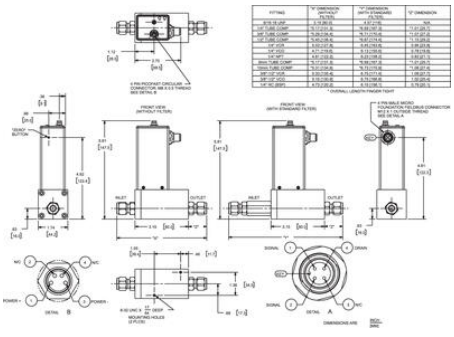

FITTING	"V" DIMENSION (WITHOUT FILTER)	"V1" DIMENSION (WITH STANDARD FILTER)	"V2" DIMENSION
8/16-18 UNF	4.38 [111.3]	4.81 [122.2]	N/A
1/4" TUBE COMP	5.11 [129.8]	16.69 [391.3]	11.41 [289.7]
3/8" TUBE COMP	5.24 [133.1]	16.82 [427.2]	11.54 [293.1]
1/2" TUBE COMP	5.36 [136.2]	16.94 [430.3]	11.66 [296.2]
1/4" VCR	5.02 [127.5]	16.60 [421.6]	11.32 [287.5]
1/4" VCO	5.11 [129.8]	16.69 [424.0]	11.41 [289.8]
3/8" NPT	4.81 [122.2]	16.39 [416.3]	11.11 [282.1]
6mm TUBE COMP	5.24 [133.1]	16.82 [427.2]	11.54 [293.1]
10mm TUBE COMP	5.36 [136.2]	16.94 [430.3]	11.66 [296.2]
3/8" VCR	5.02 [127.5]	16.60 [421.6]	11.32 [287.5]
3/8" VCO	5.11 [129.8]	16.69 [424.0]	11.41 [289.8]
1/4" BC (BSP)	4.79 [121.6]	16.37 [415.9]	11.09 [281.7]

* OVERALL LENGTH FINGER TIGHT

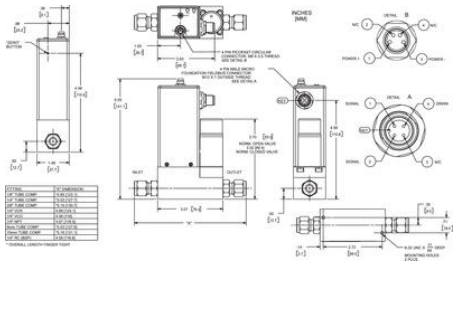

FITTING	"V" DIMENSION
1/8" TUBE COMP	4.16 [105.7]
1/4" TUBE COMP	4.33 [109.9]
3/8" TUBE COMP	4.46 [113.4]
1/4" VCR	4.19 [106.3]
1/4" VCO	4.21 [106.4]
1/4" NPT	3.87 [98.3]
6mm TUBE COMP	4.33 [110.0]
10mm TUBE COMP	4.46 [113.4]
3/8" VCR	4.19 [106.3]
3/8" VCO	4.21 [106.4]
1/4" BC (BSP)	3.96 [98.8]

* OVERALL LENGTH FINGER TIGHT

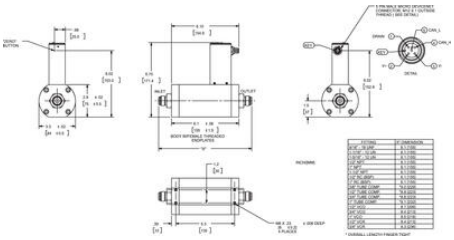

FITTING	"V" DIMENSION
8/16" - 18 UNF	4.11 [105]
1/4" TUBE COMP	4.11 [105]
3/8" TUBE COMP	4.11 [105]
1/2" TUBE COMP	4.11 [105]
1/4" NPT	4.11 [105]
1/4" VCR	4.11 [105]
1/4" VCO	4.11 [105]
1/4" BC (BSP)	4.11 [105]
6mm TUBE COMP	4.11 [105]
10mm TUBE COMP	4.11 [105]
3/8" TUBE COMP	4.11 [105]
3/8" NPT	4.11 [105]
3/8" VCR	4.11 [105]
3/8" VCO	4.11 [105]
3/8" BC (BSP)	4.11 [105]

* OVERALL LENGTH FINGER TIGHT

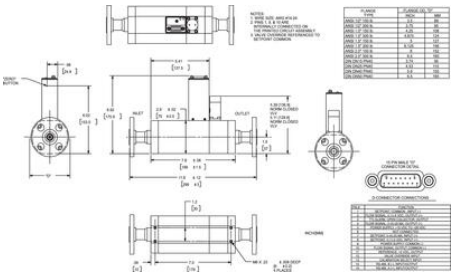

FLANGE TYPE	FLANGE OD, "D" MIN	MAX
1/8NB (1/2" OD) RF	3.5	90
1/4NB (3/4" OD) RF	4.5	115
3/8NB (7/8" OD) RF	4.62	117.5
1/2NB (1" OD) RF	4.875	125
3/4NB (1 1/4" OD) RF	5.25	133
1NB (1 1/2" OD) RF	6.12	155
1 1/4NB (1 7/8" OD) RF	6.5	165
1 1/2NB (2 1/8" OD) RF	7.5	190
2NB (2 1/2" OD) RF	8.25	210
2 1/2NB (2 7/8" OD) RF	9.12	231
3NB (3 1/2" OD) RF	10.5	266
4NB (4 1/2" OD) RF	12	305
5NB (5 1/2" OD) RF	13.5	343
6NB (6 5/8" OD) RF	14.5	368

15 PIN MALE "D" CONNECTOR DETAIL

D-CONNECTOR CONNECTIONS

PIN #	FUNCTION
1	SETPOINT COMMON (INPUT 2)
2	FLOW SIGNAL 0-5 VDC OUTPUT (+)
3	FLOW SIGNAL OPEN COLLECTOR OUTPUT
4	FLOW SIGNAL 0-20 MA OUTPUT (+)
5	POWER SUPPLY +15 VDC (+) OR VDC
6	NOT CONNECTED
7	SETPOINT 0-20 MA INPUT (+)
8	SETPOINT 0-5 VDC INPUT (+)
9	POWER SUPPLY COMMON (-)
10	FLOW SIGNAL OUTPUT COMMON (-)
11	NOT CONNECTED
12	CALIBRATION SELECT INPUT
13	RS-485 A (+) INPUT/OUTPUT
14	RS-485 A (+) INPUT/OUTPUT

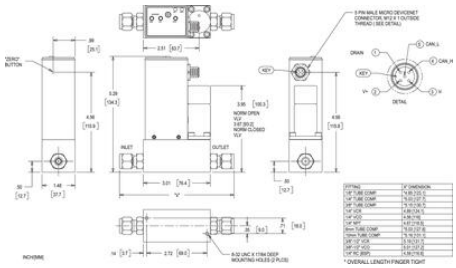

FITTING	"V" DIMENSION
1/8" TUBE COMP	4.16 [105.7]
1/4" TUBE COMP	4.33 [109.9]
3/8" TUBE COMP	4.46 [113.4]
1/4" VCR	4.19 [106.3]
1/4" VCO	4.21 [106.4]
1/4" NPT	3.87 [98.3]
6mm TUBE COMP	4.33 [110.0]
10mm TUBE COMP	4.46 [113.4]
3/8" VCR	4.19 [106.3]
3/8" VCO	4.21 [106.4]
1/4" BC (BSP)	3.96 [98.8]

* OVERALL LENGTH FINGER TIGHT

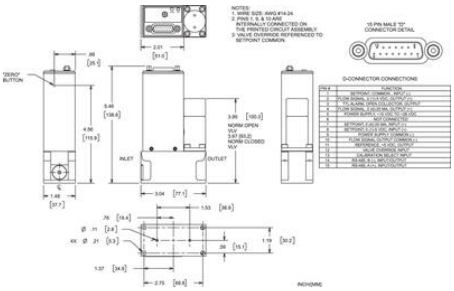

D-CONNECTOR CONNECTIONS

PIN #	FUNCTION
1	SETPOINT COMMON (INPUT 2)
2	FLOW SIGNAL 0-5 VDC OUTPUT (+)
3	FLOW SIGNAL OPEN COLLECTOR OUTPUT
4	FLOW SIGNAL 0-20 MA OUTPUT (+)
5	POWER SUPPLY +15 VDC (+) OR VDC
6	NOT CONNECTED
7	SETPOINT 0-20 MA INPUT (+)
8	SETPOINT 0-5 VDC INPUT (+)
9	POWER SUPPLY COMMON (-)
10	FLOW SIGNAL OUTPUT COMMON (-)
11	NOT CONNECTED
12	CALIBRATION SELECT INPUT
13	RS-485 A (+) INPUT/OUTPUT
14	RS-485 A (+) INPUT/OUTPUT

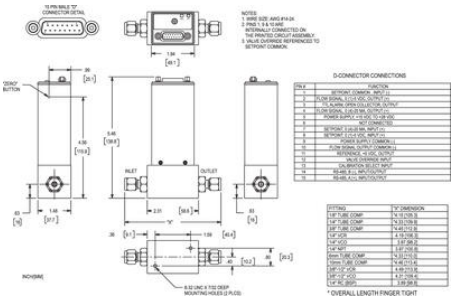

D-CONNECTOR CONNECTIONS

PIN #	FUNCTION
1	SETPOINT COMMON (INPUT 2)
2	FLOW SIGNAL 0-5 VDC OUTPUT (+)
3	FLOW SIGNAL OPEN COLLECTOR OUTPUT
4	FLOW SIGNAL 0-20 MA OUTPUT (+)
5	POWER SUPPLY +15 VDC (+) OR VDC
6	NOT CONNECTED
7	SETPOINT 0-20 MA INPUT (+)
8	SETPOINT 0-5 VDC INPUT (+)
9	POWER SUPPLY COMMON (-)
10	FLOW SIGNAL OUTPUT COMMON (-)
11	NOT CONNECTED
12	CALIBRATION SELECT INPUT
13	RS-485 A (+) INPUT/OUTPUT
14	RS-485 A (+) INPUT/OUTPUT

FITTING	"V" DIMENSION
1/8" TUBE COMP	4.16 [105.7]
1/4" TUBE COMP	4.33 [109.9]
3/8" TUBE COMP	4.46 [113.4]
1/4" VCR	4.19 [106.3]
1/4" VCO	4.21 [106.4]
1/4" NPT	3.87 [98.3]
6mm TUBE COMP	4.33 [110.0]
10mm TUBE COMP	4.46 [113.4]
3/8" VCR	4.19 [106.3]
3/8" VCO	4.21 [106.4]
1/4" BC (BSP)	3.96 [98.8]

* OVERALL LENGTH FINGER TIGHT

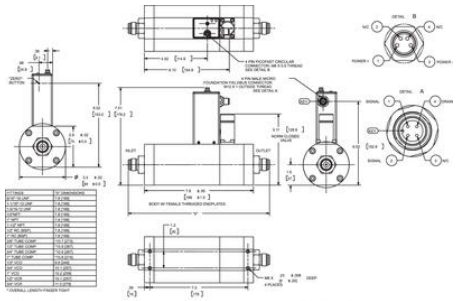

FITTING	"V" DIMENSION
8/16-18 UNF	4.38 [111.3]
1/4" TUBE COMP	5.11 [129.8]
3/8" TUBE COMP	5.24 [133.1]
1/2" TUBE COMP	5.36 [136.2]
1/4" VCR	5.02 [127.5]
1/4" VCO	5.11 [129.8]
3/8" NPT	4.81 [122.2]
6mm TUBE COMP	5.24 [133.1]
10mm TUBE COMP	5.36 [136.2]
3/8" VCR	5.02 [127.5]
3/8" VCO	5.11 [129.8]
1/4" BC (BSP)	4.79 [121.6]

* OVERALL LENGTH FINGER TIGHT

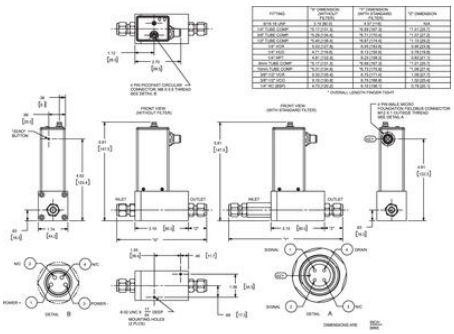

FITTING	"V" DIMENSION (WITHOUT FILTER)	"V1" DIMENSION (WITH STANDARD FILTER)	"V2" DIMENSION
8/16-18 UNF	4.38 [111.3]	4.81 [122.2]	N/A
1/4" TUBE COMP	5.11 [129.8]	16.69 [391.3]	11.41 [289.7]
3/8" TUBE COMP	5.24 [133.1]	16.82 [427.2]	11.54 [293.1]
1/2" TUBE COMP	5.36 [136.2]	16.94 [430.3]	11.66 [296.2]
1/4" VCR	5.02 [127.5]	16.60 [421.6]	11.32 [287.5]
1/4" VCO	5.11 [129.8]	16.69 [424.0]	11.41 [289.8]
3/8" NPT	4.81 [122.2]	16.39 [416.3]	11.11 [282.1]
6mm TUBE COMP	5.24 [133.1]	16.82 [427.2]	11.54 [293.1]
10mm TUBE COMP	5.36 [136.2]	16.94 [430.3]	11.66 [296.2]
3/8" VCR	5.02 [127.5]	16.60 [421.6]	11.32 [287.5]
3/8" VCO	5.11 [129.8]	16.69 [424.0]	11.41 [289.8]
1/4" BC (BSP)	4.79 [121.6]	16.37 [415.9]	11.09 [281.7]

* OVERALL LENGTH FINGER TIGHT

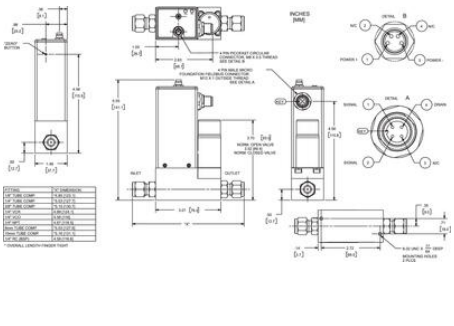

FITTING	"V" DIMENSION
1/8" TUBE COMP	4.16 [105.7]
1/4" TUBE COMP	5.33 [137.3]
3/8" TUBE COMP	5.46 [138.7]
1/4" VCR	5.19 [131.8]
1/4" VCO	5.21 [132.3]
1/4" NPT	4.87 [123.7]
6mm TUBE COMP	5.33 [137.3]
10mm TUBE COMP	5.46 [138.7]
3/8" VCR	5.19 [131.8]
3/8" VCO	5.21 [132.3]
1/4" BC (BSP)	4.96 [125.9]

* OVERALL LENGTH FINGER TIGHT

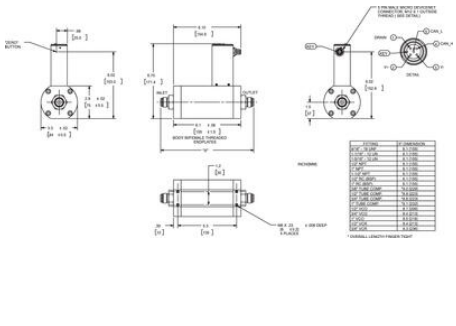

FITTING	"V" DIMENSION
8/16" - 18 UNF	4.11 [105]
1/4" TUBE COMP	4.11 [105]
3/8" TUBE COMP	4.11 [105]
1/2" TUBE COMP	4.11 [105]
1/4" NPT	4.11 [105]
1/4" VCR	4.11 [105]
1/4" VCO	4.11 [105]
1/4" BC (BSP)	4.11 [105]
6mm TUBE COMP	4.11 [105]
10mm TUBE COMP	4.11 [105]
3/8" TUBE COMP	4.11 [105]
3/8" NPT	4.11 [105]
3/8" VCR	4.11 [105]
3/8" VCO	4.11 [105]
3/8" BC (BSP)	4.11 [105]

* OVERALL LENGTH FINGER TIGHT

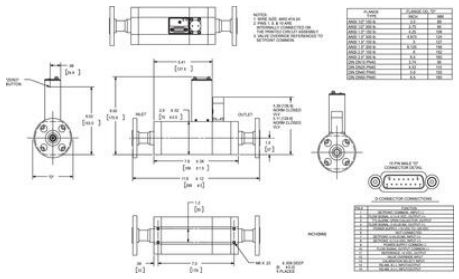

FLANGE DIA	FLANGE DIA "D"	
	INCH	MM
ANSI 1/2" (DN 15)	3.50	89
ANSI 3/4" (DN 20)	3.75	95
ANSI 1" (DN 25)	4.25	108
ANSI 1 1/4" (DN 32)	4.62	117
ANSI 1 1/2" (DN 40)	5	127
ANSI 2" (DN 50)	6	152
ANSI 2 1/2" (DN 65)	6.12	155
ANSI 3" (DN 80)	7	178
ANSI 4" (DN 100)	7.5	191
ANSI 5" (DN 125)	8.5	216
ANSI 6" (DN 150)	9.5	241
DIN (DN25 PN40)	4.9	125
DIN (DN40 PN40)	6.3	160
DIN (DN50 PN40)	6.9	175

PIN	CONNECTION
1	NC (NOT CONNECTED)
2	SIGNAL GROUND (INPUT)
3	SIGNAL GROUND (OUTPUT)
4	SIGNAL GROUND (INPUT)
5	SIGNAL GROUND (OUTPUT)
6	NC (NOT CONNECTED)
7	NC (NOT CONNECTED)
8	NC (NOT CONNECTED)
9	NC (NOT CONNECTED)
10	NC (NOT CONNECTED)
11	NC (NOT CONNECTED)
12	NC (NOT CONNECTED)
13	NC (NOT CONNECTED)
14	NC (NOT CONNECTED)
15	NC (NOT CONNECTED)