EM-346

BLDC-motorstyring

EM-346
BRUSHLESS DC-MOTOR DRIVER 12-35V 10A

- 12-48 VDC
- Strømgrænse (0.1-25 A)
- Alarm og bremseudgang
- Parameterindstillinger via EM-236 eller EM-328

PRODUKTBESKRIVELSE

SPECIFIKATIONER

2421_Peak current (A)	25
Control type	Hastighed, Braking, Retning, Torque, Softstart/stop
Forsyningsspænding	12 V DC, 24 V DC
Indstillingsområde	0.1-25 A
Leverandør	Electromen
Montage	DIN-skinne
PWM frequency	16kHz
Suitable engine	BLDC
Vægt	200 g

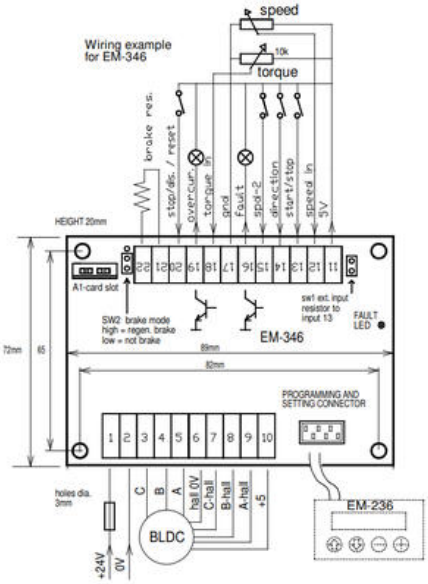
Wiring example
for EM-346
speed
10k
torque
brake res.
stop/dis. / reset
overcurr.
torque
gnd
Fault
spd-2
direction
start/stop
speed
5V
HEIGHT 20mm
A1-card slot
SW2 brake mode
high = regen. brake
low = not brake
sw1 ext. input
resistor to
input 13
FAULT
LED
EM-346
72mm
65
89mm
82mm
PROGRAMMING AND
SETTING CONNECTOR
holes dia.
3mm
C
B
A
hall 0V
C-hall
B-hall
A-hall
+5
BLDC
+24V
0V
EM-236

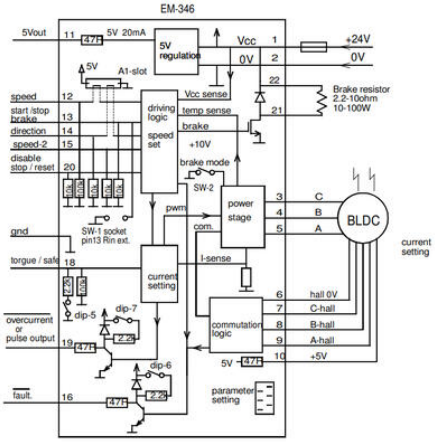
EM-346
5Vout
5V 20mA
5V
regulation
Vcc
0V
+24V
0V
A1-slot
speed
start /stop
brake
direction
speed-2
disable
stop / reset
driving
logic
speed
set
Vcc sense
temp sense
brake
+10V
brake mode
SW-2
Brake resistor
2.2-10ohm
10-100W
power
stage
pwm
com.
C
B
A
BLDC
current
setting
gnd
SW-1 socket
pin13 Rin ext.
torque / safe
I-sense
current
setting
dip-5
dip-7
dip-6
overcurrent
or
pulse output
fault.
commutation
logic
hall 0V
C-hall
B-hall
A-hall
+5V
parameter
setting